Vol.1 Issue-7, MARCH 2021 (e-ISSN: 2582-8223)

JUST AGRICULTURE
multidisciplinary e-Newsletter

Evaluation and utilization of different bamboo species by Assam tribe for their commercial Bamboo Construction

Y.Y. Sumthane

Ph.D. (Wood Science and Technology), CEO Brahmaputra Forest Products

ARTICLE ID: 001

Introduction

Bamboo is the green gold, environmental friendly and sustainable resources available in NE region, which is not being used to its full potential. Bamboo which are widely spread in India, offer numerous opportunities, in this regard there is much potential for expanding it. In view of commercial cultivation and economic utilization of Bamboo as a substitute for the fast depleting timber resources, a comprehensive programme of Bamboo for sectional up gradation, enhancement of employment opportunities for artisans promotion of value addition through better and well-designed products. Bamboo is Poor man's timber use of the Bamboo is maximum each and every part used by Assam tribe for their commercial use specially their houses made from Bamboo, Agriculture equipment made from Bamboo, Fishing done help of the bamboo, charcoal and fire getting from Bamboo. During survey in Lakhimpur district farmers planted bamboo on their bunds with rice field. This agroforestry pattern helps then to high yield and controlling of Puddling condition to absorb more water from Bamboo species, *Bambosa balcooa*, *Dendrocalyamus strictus*, *Dendrocalyamus hamiltoni*, for local construction or Bamboo mat, some Bamboo species used as an edible material, help of wood technology Brahmaputra Forest Products made Bamboo Corrugated sheets, MDF (Medium Density Fibre Board), Particle Boards, Mat Boards, *etc*. due to this initiative local women's engaged in work and they earn money, help of this money they manage their Budget, unemployed youngster's got job and wealth. Bamboo offers a readily available source of material, as a recyclable renewable alternative to single use plastic.

Bamboo is a versatile, strong, renewable material. A member of the grass family, subfamily Bambusoideae, it is the fastest growing woody plant producing a mature fiber for

JUST AGRICULTURE
multidisciplinary e-Newsletter

use within three years. There are more than 1200 species and 75 genera (Tewari 1993) of bamboo of which 130 are found in India.

Bamboo has been used since 3500 BC and has more than 1500 documented uses. Bamboo is capable of providing solutions for shelter, livelihood, and food security for regions where bamboo grows. They also provide ecological security by timber substitution and efficient carbon sinks.

However bamboo is subject to attack by fungi and insects and untreated bamboo have a life expectancy of not more than five years. The physical and mechanical properties of bamboo are subjected to a greater variability determined by culm height, topography and climate under which the bamboo has grown. Fire presents a potential hazard in any form of construction, but the risk is especially high in bamboo buildings. The combination of bamboo and matting and the tendency of the internodes to burst cause rapid spread of fire. The risk is increased when the joint lashing is destroyed which can cause the building to collapse.

Bamboo is an extremely strong fiber with twice the compressive strength of concrete, and roughly the same strength to weight ratio of steel in tension. In addition, testing has shown that the shape of bamboo is hollow tube gives it a strength factor of 1.9 times over an equivalent solid pole. The reason being that in a beam, the only fibers doing the work are those in the very top (compression) and bottom (tension). The rest of the mass is dead weight. The strongest bamboo fibers have a greater sheer resistance than structural woods, and they take much longer to come to ultimate failure. (Ref: Building with Bamboo, Darrel DeBoer). The structural advantages of bamboo are its strength and light weight whereby properly constructed bamboo buildings are inherently resistant to wind and earthquakes. It is important to follow good harvesting practices to ensure sustainable yields:

- Do not cut culms younger than three years.
- Do not harvest in the rainy season. In India it is advisable to harvest in the winter season when the soluble sugars are the lowest (Joseph 1958).
- Do not harvest from a flowering grove.
- Do not cut lower than the second node, or higher than 300mm above the ground.

JUST AGRICULTURE
multidisciplinary e-Newsletter

- Remove branches, culm tips, and all harvest debris. Waste material obstructs growth, encourages disease and makes later harvests more difficult.
- Retain leaves for mulch. Their 6% silica helps harden later culms.
- Leave a minimum of six mature culms uncut in each clump to sustain grove vitality and ensure a steady yield. As new culms grow around the edge a solution is to use the horseshoe method by cutting a narrow path into the grove and harvest the mature culms from within.

The best natural protection will result by harvesting mature culms during the winter months, leaving them upright for a few days after harvesting and then soaking them in water for 4-12 weeks.

Grading of bamboo-

The shape size and quality of bamboo can vary greatly even within a given species. The following grading rules will help in selecting the best material for construction.

- Straightness- the bamboo culms should be as straight as possible. A line stretched between the tip and butt ends should not fall outside of the culm.
- Taper- or change in diameter over length should be kept to a minimum. A maximum taper of 10mm per meter is acceptable for lengths up to 3 meters.
- Nodes- nodes are the strong points in the culm and should be used to advantage especially at critical joints. (Follow details as given in drawings).
- Splitting- it is a good practice to cut bamboo lengths longer than required to allow cutting away of split ends that can have a serious effect on the strength of the bamboo
- Insect/fungal attack- bamboo culms that show signs of insect or fungi attack should be avoided.

Selection and Size of Bamboo-

Only bamboos with at least three-year maturity shall be used in construction.

For the main structural elements of the house particularly posts and beams, *Bambusa balcoa* or similar in the region can be used.

JUST AGRICULTURE
multidisciplinary e-Newsletter

For roofing elements like rafters and purlins *Bambusa tulda* or *Bambusa balcoa* or similar in the can be used.

Bambusa nutans or other bamboos shall be used for the lattice work in wattle and daub walls.

Columns and roof members should be a minimum of 70-100 mm in diameter at thin end of bamboo and wall thickness of bamboo not less than 10-12 mm. The distance between nodes (internodes length) should not exceed 300-600 mm.

Joinery Tools-

Bamboo is generally used as it is in required length or in split form. Traditionally this task is performed by only one tool. Though there are few carpentry tools that can be used for different purposes. Usually, below shown traditional tools are used by bamboo artisan for harvesting and construction.

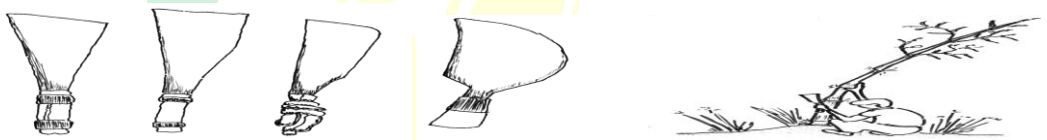

Joinery of Bamboo-

All the joinery in the structure is based on four types of lashing and three types of shear keys. The following terminologies will describe the joinery.

Lashing: Lashing is used for joining two or more poles together with a tying material.

Wrap: A wrap is a turn around two or more poles.

Frap: A frap is turn made between two poles to pull the wrap together.

Dowel: Dowel is a pin (wood or bamboo with fibers in longitudinal direction) of 10 mm. Diameter inserted right through the pole

Clove Hitch: Clove hitch lashing is used for joining two or more poles together with a tying material.

Square Lashing: Square lashing shall begin and end in a clove hitch. It shall be used in a condition where there is no tendency for poles to spring apart.

JUST AGRICULTURE
multidisciplinary e-Newsletter

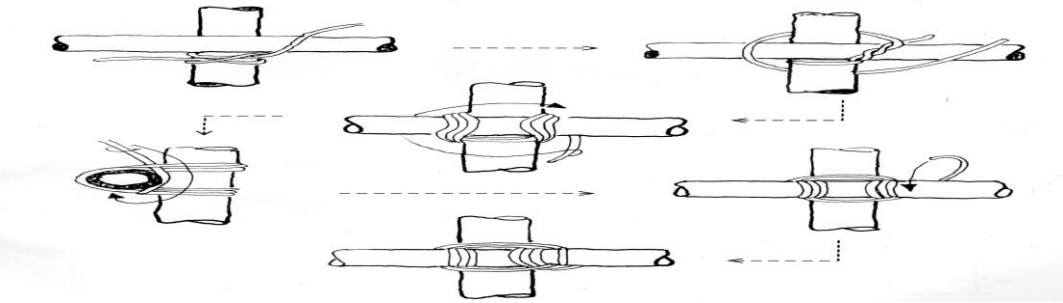

Bamboo Treatment for Longer Life of Shelter

Bamboo has very little natural toxicity and therefore, is easily prone to fungi and insect attack. The objective of treatment is to remove the starch and other carbohydrates (soluble sugars) that attract fungi and insects and replace it with chemicals in the cells of the bamboo thereby increasing the life of the bamboo. Well treated bamboo has a life expectancy of 50 years without losing its structural properties. The efficiency of the chemical treatment is influenced by anatomical structure of the bamboo culm. There are no radial pathways in the culm tissue, like the ray cells in wood, and lateral cell-to-cell movement of preservative depends on a slow diffusion process. Freshly cut culms are easier to treat due to the water-filled cells providing a continuous transportation channel. Both ends of the culms should be cut up to the next node in order to remove the blockage of vessels.

Whereas there are several indigenous treatment systems like limewash and smoking of bamboo, chemical treatments are known to have longer effect against fungi and insects. The use of water as a solvent to carry the preservatives into the cells of the bamboo. Water-soluble salts are dissolved in water; on treatment the water evaporates leaving the salts inside the bamboo. The recommended salts are boric acid, borax and copper sulphate. Boron salts are effective against borers, termites and fungi (except soft rot fungi). High concentrations of salts have fire retardant properties as well. They are not toxic.

Necessary Tools Required for Bamboo Treatment.

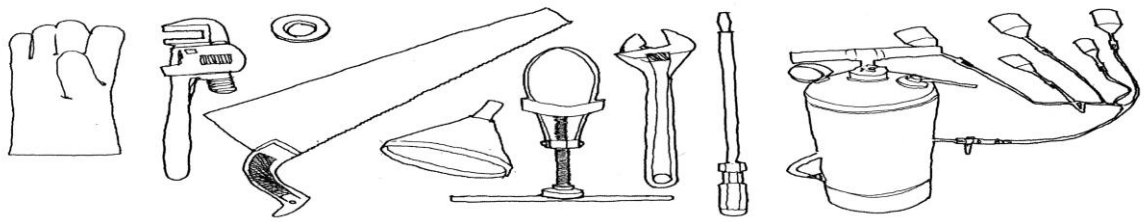

1. Rubber Gloves

2. Adjustable Wrench

3. Tape

4. Hardwood back saw

5. Funnel

6. Clamp

7. Adjustable Spanner

8. Screwdriver

9. Hand Operated Pump

Side selection

1. Flooded areas

2. Land filled areas

3. Filled soft soils

4. River or Canal

JUST AGRICULTURE
multidisciplinary e-Newsletter

Conclusion:

In the villages of Assam, bamboo building is common even today. The houses are detailed out to combat the heavy monsoons. The floor of the house is a bamboo weave that allows the water of a flood to flow in, rather than keep it out. This is an important principle of sustainable development. During this time, the inhabitants of the houses get into the canoe that every house stores in the stilt area below the bamboo floor. When the flood waters recede, the assamese people occupy their house again. The belongings are protected by putting them up on the bamboo loft. The roof of the house is built with local grass and can last up to 10 years before it is replaced again.